TECHNICAL DATA SHEET

# PRO-SERIES GROUND SCREW Ø76 x 1250mm

| | |
|---|---|
| **Art. no:** | 31042 |
| **Weight:** | 9,00 kg |
| **Dimensions:** | Pipe: 76,1 x 3,0 x 1250 mm<br>Flange: 8,0 x 200 mm |
| **Materials:** | Steel Type Pipe: S235<br>Steel Type Flange: S355<br>Surface treatment: Galvanized according to DIN EN ISO 1461 |
| **Installation:** | Electric Ground Screw Driving Machine *(Art.No: 12001)*<br>Pneumatic Ground Screw Driving Machine *(Art.No: 12005)*<br>Hydraulic Ground Screw Driving Machine *(Art.No: 12090)* |
| **Use:** | Light construction e.g. porches, garden rooms and modular homes. |
| **Fixation:** | M16 / M12 / M10 Bolts |

*Side view*

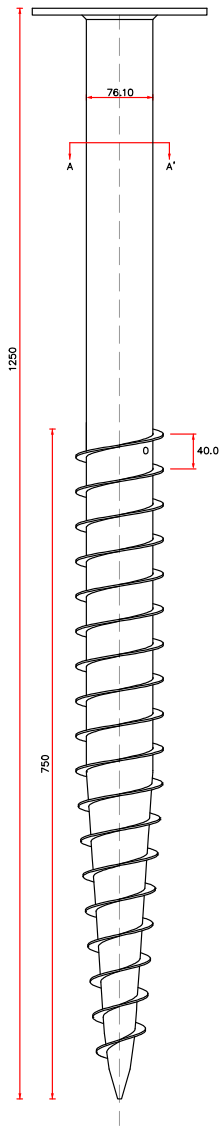


*Cross cut*

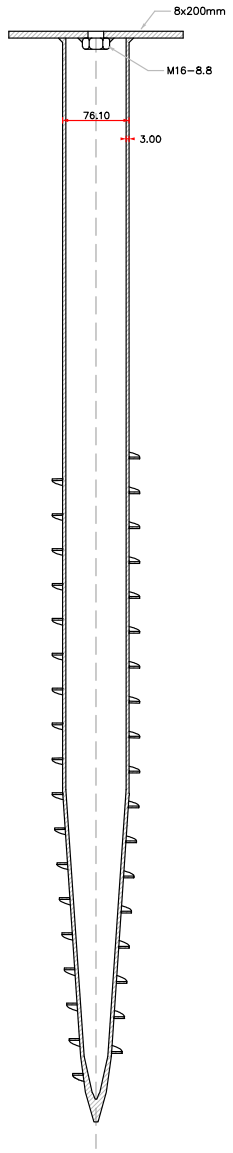


*Top view flange*

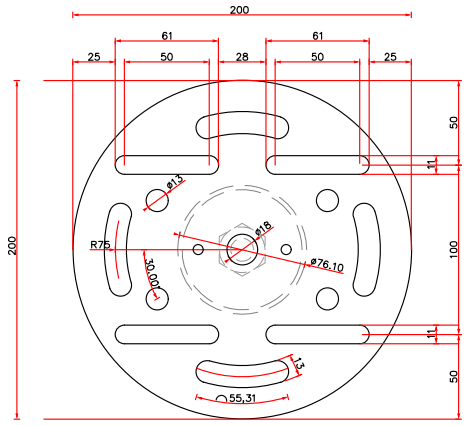


*Cross cut pipe (A–A')*

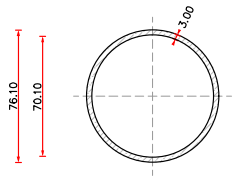


| Drawing description | PRO-SERIES GROUND SCREW Ø76 x 1250mm | |
|---|---|---|
| **Date** | **Signed** | **Sheet number** |
| 12/2018 | DVDE | 2 of 4 |
| **Drawing number** | **Format** | **Document status** |
| 31042-V1 | A4 | DEF. |


*FIRST BASE GROUND SCREWS*
*Patersweg 2, 5406 XJ*
*Uden, Holland.*

info@firstbasegroundscrews.com
www.firstbasegroundscrews.com
0031 413 432 052


Click here for the FIRST BASE Load Capacity Chart

**Products to combine:**

17021 – POLEHOLDER M20
17022 – L-BRACKET M16 80mm
17023 – L-BRACKET M16 160mm